Q-MATIC TP3110™

Q-MATIC TP3110™ is a network ticket printer for Q-WIN™ and the Q-MATIC TP3100™ systems. The printer has large tactile buttons making it easy for visitors to select a service.

Features

- Ethernet connection.
- Thermal print head.
- 0-5 ticket buttons.
- Supports all Windows fonts.
- Tactile buttons.

With the Q-MATIC TP3110™ you can

- Print tickets in any language.

Customer Flow Management™

Q-MATIC AB
Neongatan 8, SE-431 53 Mölndal, Sweden
Tel. +46 31 756 46 00, Fax +46 31 756 46 99
info@q-matic.se, www.q-matic.com

Q-MATIC TP3110™

Article number

10213031

Used with

Q-WIN™ S SE or newer and Q-MATIC TP3100™ systems.

Technical Specifications

Size (W X H X D)	174 X 182 X 300 mm
Weight	1.040 kg
Power Supply	External 24 V, 4 A
Connection	TCP/IP, Ethernet
Network transmission speed – minimum	10 Mbit/s
Network transmission speed – supported	10/100 Mbit/s
Power Consumption – stand by	1.6 W
Power Consumption – printing	W_{max} = 100 W, T_{max} = 1 sec
Temperature – operating	10-40 °C
Temperature – storage	0-40 °C
Humidity – operating	15-75 % relative humidity
Humidity – storage	10-90 % relative humidity
Expected life – thermal print head	Will print more than 1.65 million standard tickets (60 mm) with a print rate of 12.5 %.
Expected life – switch	A switch on the curcuit board will take more than 2 million presses.
Complies with the following standards	CE, RoHS.

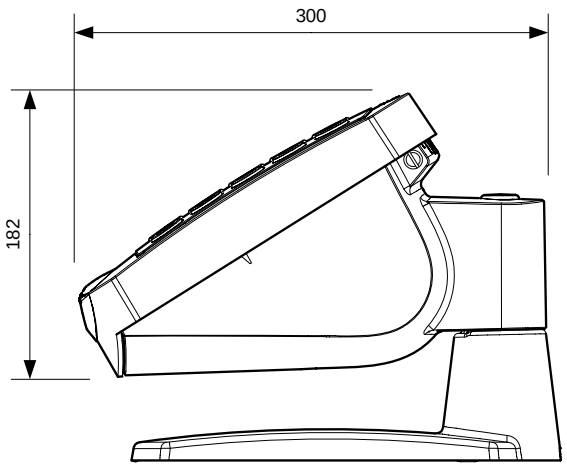

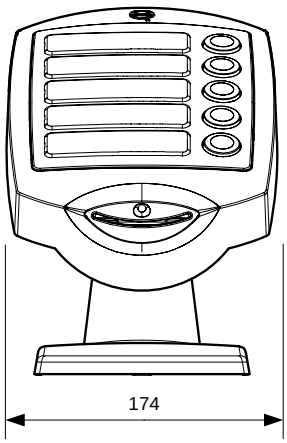

DS133.01A